JW METAL CABINETS



1200 Series

SPECIFICATIONS GUIDE 2026

BASE CABINET CONSTRUCTION

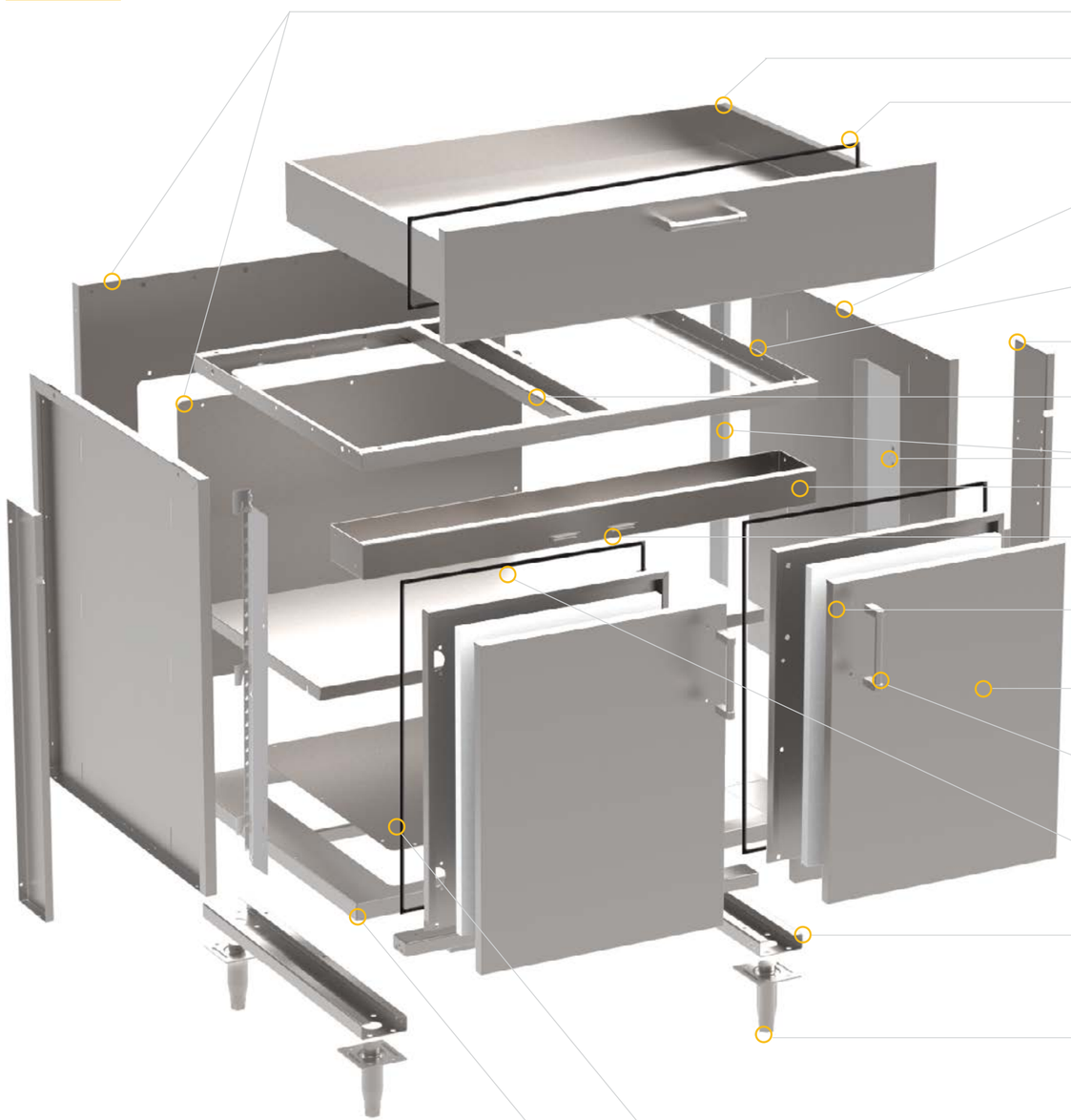

- Back Panel w/ Removable MEP (Mechanical, Electrical, and Plumbing) Access
  pg. 15 MEP access specifications
- Weather Resistant Gasket
- Side Panels w/ MEP KOs
  pg. 15 MEP access specifications
- Full Perimeter Stretcher
- Structural Support Panels
- Structural Support Rail
  Included on spans 24" and wider
- Cross Member
- Magnetic Catch
- Sound Dampening Material
- Dual Panel Door
  pg. 14-19 Door styles and dimensions
- 316 Stainless Steel Handles
  pg. 20-21 Handle styles and dimensions
- Structural Support Rails
- Adjustable Height Cabinet Legs
- Optional Removable MEP Access
  pg. 15 MEP access specifications
- Floor Panel
- Encapsulated Drawer Box



- FlexBuilt™ Integrated Support Rail
  pg. 6-7 Specifications



- Adjustable Shelf
  pg.7 Shelf options

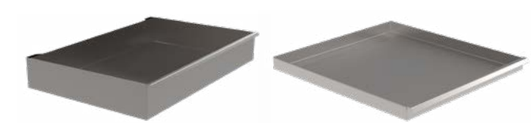

FlexBuilt™ INTEGRATED SUPPORT RAIL

Base cabinet interiors utilize the FlexBuilt™ integrated support system, a concealed internal pilaster engineered into the cabinet structure to support adjustable shelving and drawer components without exposed hardware.





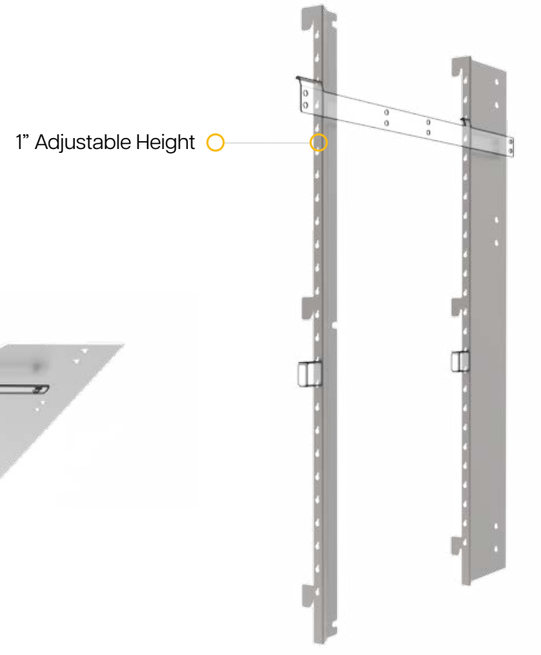

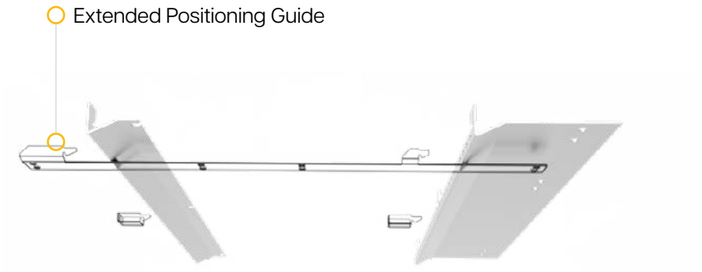

Drawer Slide Mounting Bracket



Shelf Attachment



Pull Out Shelf



1.5”

WEIGHT LIMIT

- 100-150 lbs. static load capacity
- Depths over 21”, 125-170 lbs. static load capacity

Pull Out Drawer



3”

WEIGHT LIMIT

- 100-150 lbs. static load capacity
- Depths over 21”, 125-170 lbs. static load capacity

Base Cabinet Static Shelf

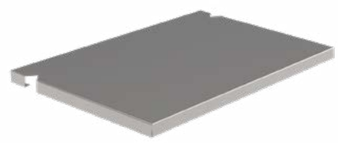

1” Face

WEIGHT LIMIT

- 45 lbs. (per square foot) static load capacity

CABINET HARDWARE

Self Close Concealed Door Hinges

LAMP 100° Stainless Steel



Soft Close Drawer Slides

Blum® MOVENTO

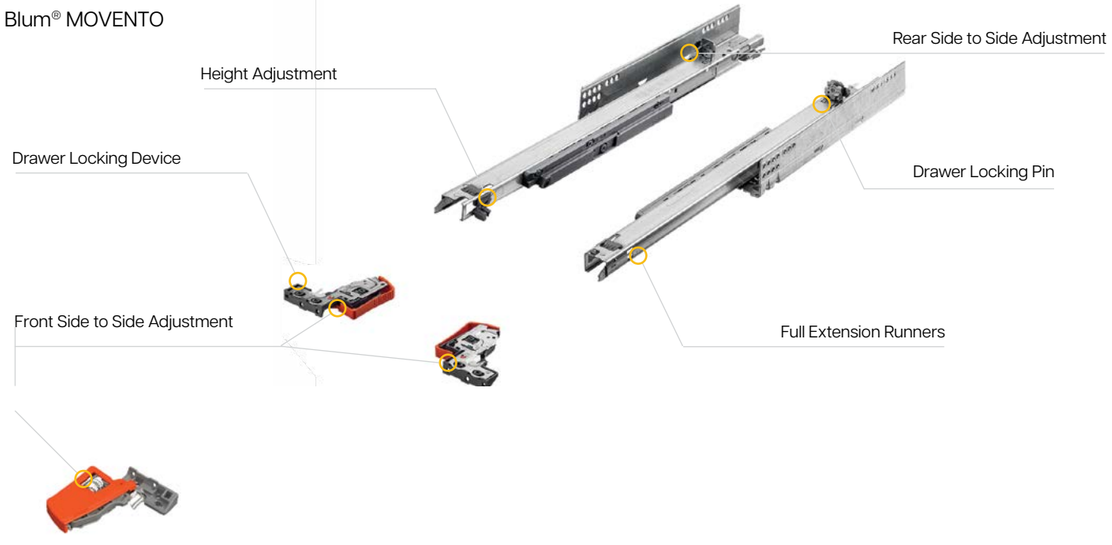

125-170 lbs. Static Load Capacity

Magnetic Catch



Door Mount Weather Resistant Gasket

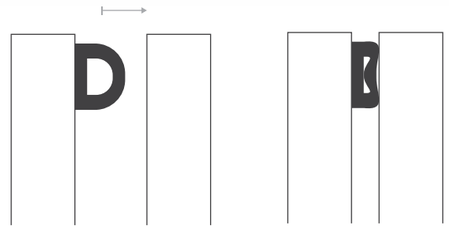

CABINET HARDWARE

110° Soft Close Door Hinges

Blum® CLIP top BLUMOTION Hinge



Soft Close Drawer Slides

Blum® MOVENTO

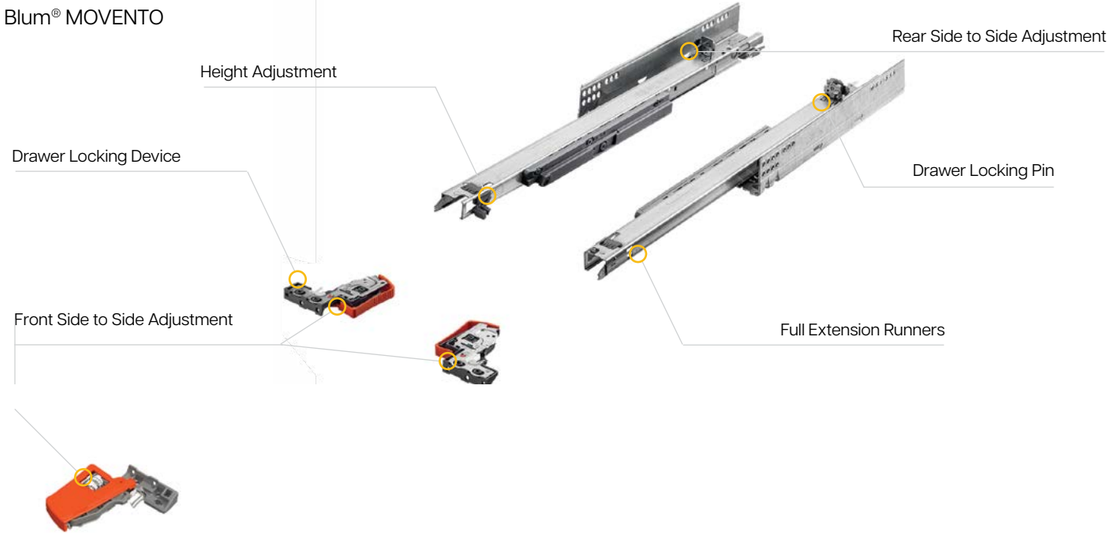

125-170 lbs. Static Load Capacity

Touch-to-Open Door System

Blum® TIP-ON for Doors

Built into cabinet wall.



Touch-to-Open Drawer System

Blum® TIP-ON BLUMOTION MOVENTO

Used in addition to Movento drawer slides only.

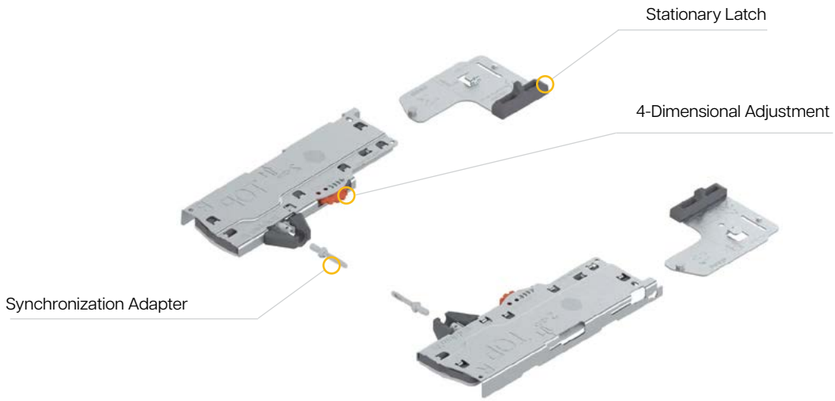

CABINET STANDARD DIMENSIONS

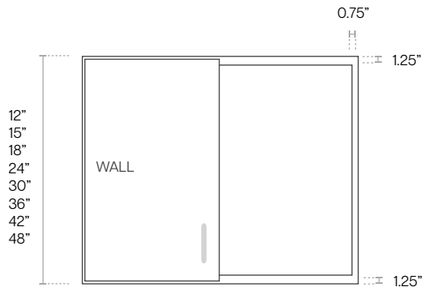

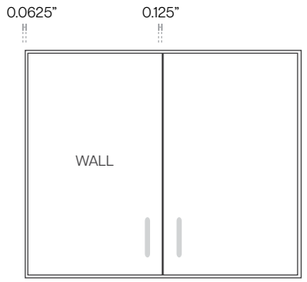

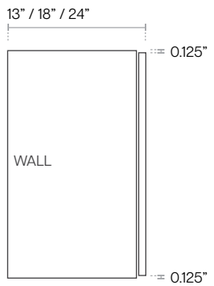

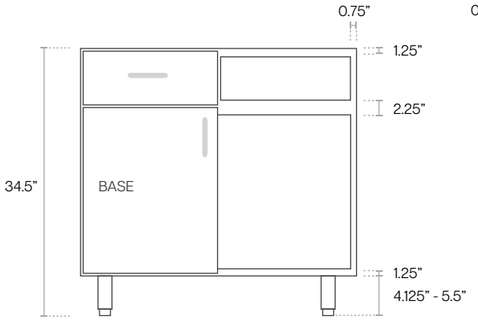

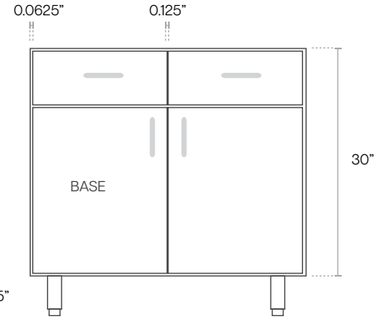

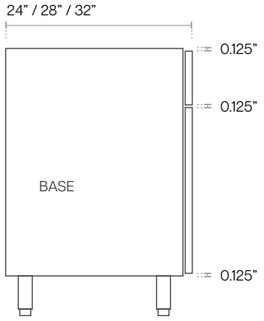

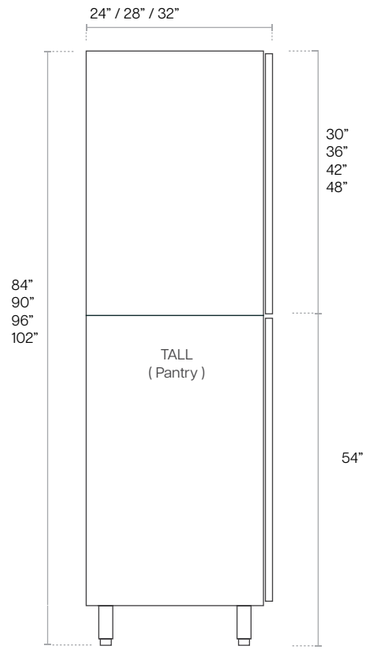

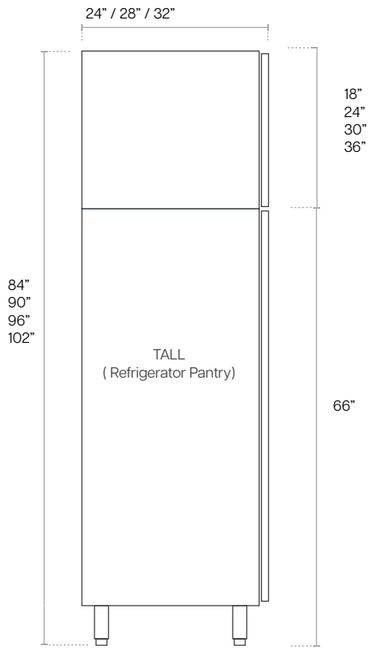

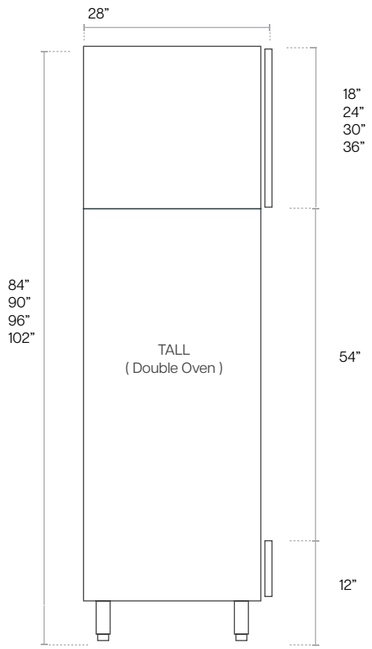

ACCESSIBLE HEIGHT CABINET DIMENSIONS

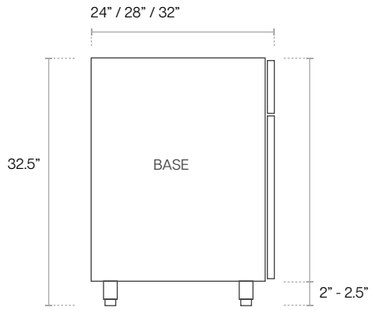

STANDARD

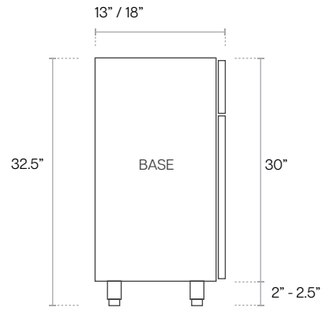

SPECIALTY DEPTH

SINK BASE CABINET TOP CUTOUT DIMENSIONS

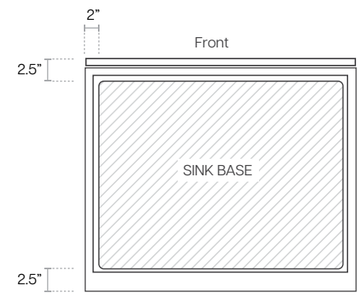

ADJUSTABLE LEG PLACEMENT DIMENSIONS

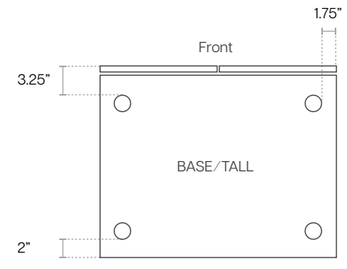

BASE CABINET MEP ACCESS

MEP (Mechanical, Electrical, and Plumbing)

DRAWER DIMENSIONS

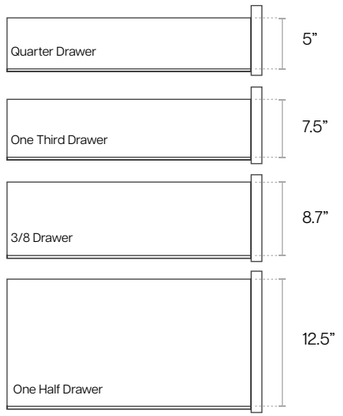

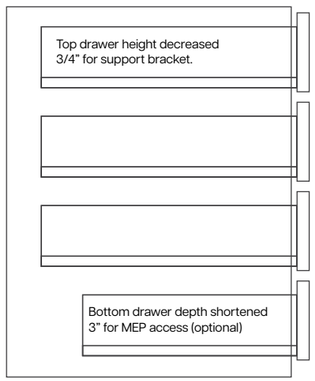

INTERIOR DRAWER DIMENSIONS

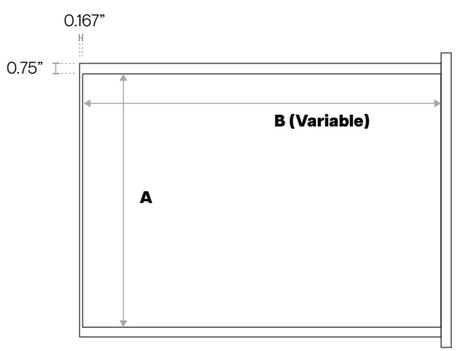

INTERIOR DRAWER DIMENSIONS

CABINET WIDTH	A	B		
		24”	28”	32”
12”	5.35	20.83	23.83	26.83
15”	8.35	20.83	23.83	26.83
18”	11.35	20.83	23.83	26.83
24”	14.35	20.83	23.83	26.83
27”	20.35	20.83	23.83	26.83
30”	23.35	20.83	23.83	26.83
33”	26.35	20.83	23.83	26.83
36”	29.35	20.83	23.83	26.83

CABINET DEPTH

Removable Panels

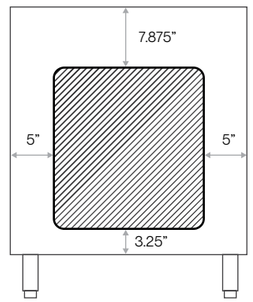

BACK

9” & 12” Width Back Wall MEP Access

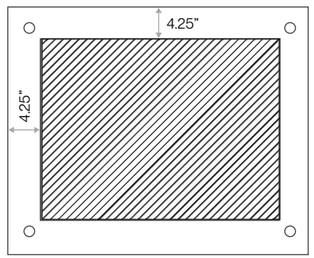

(OPTIONAL) BOTTOM

Sidewall Knock Outs

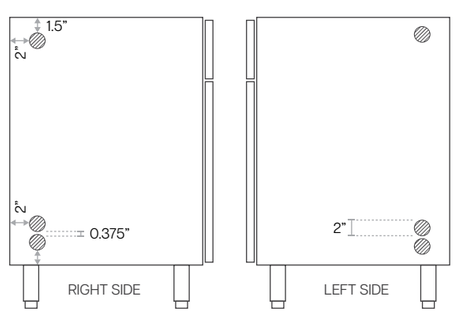

NOTE:

- Knock outs centered on the back
- No removable floor panel



Knock Out Bushing

- (4) Bushings included per base cabinet
- Additional available upon request

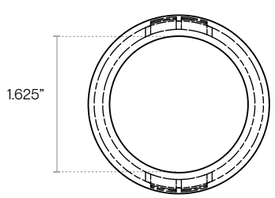

CABINET DOOR CONSTRUCTION

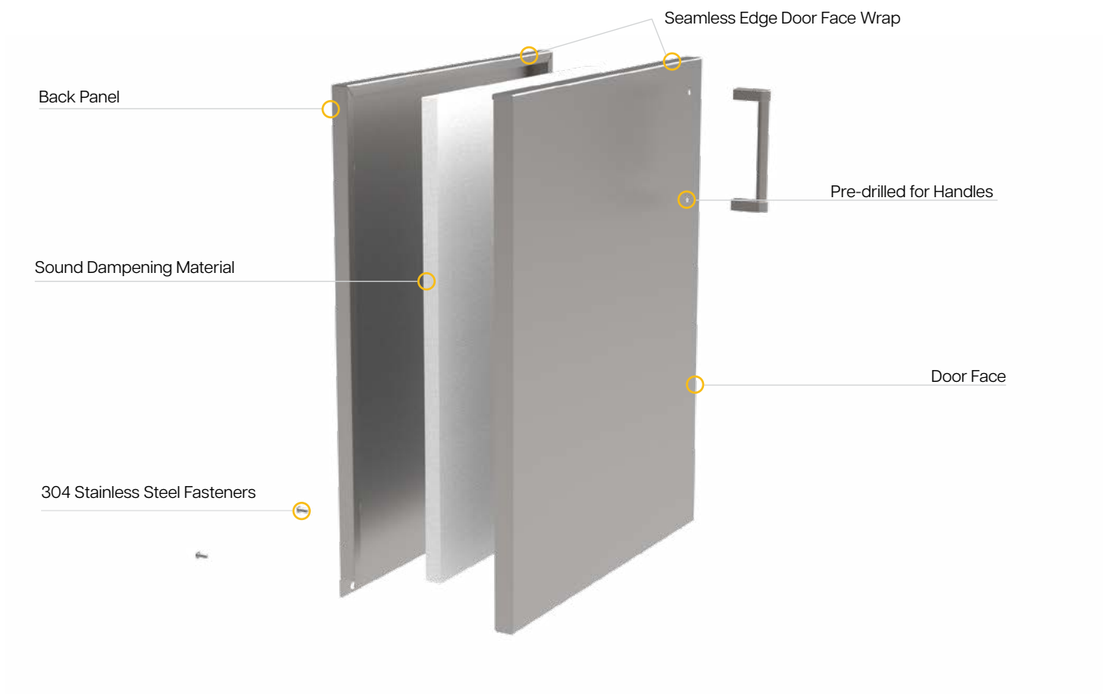

Shaker / Thin Shaker Construction

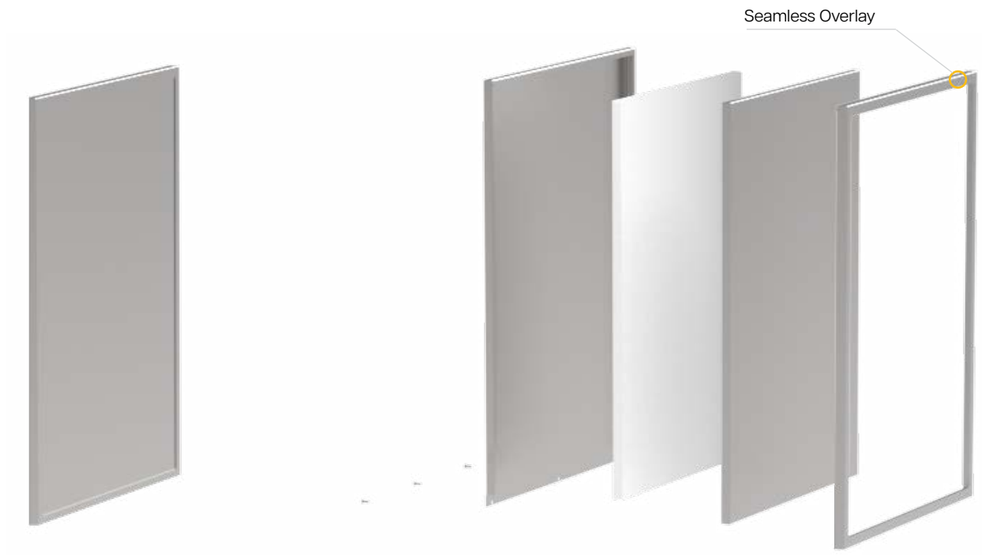

Integrated Pull Door Style Construction

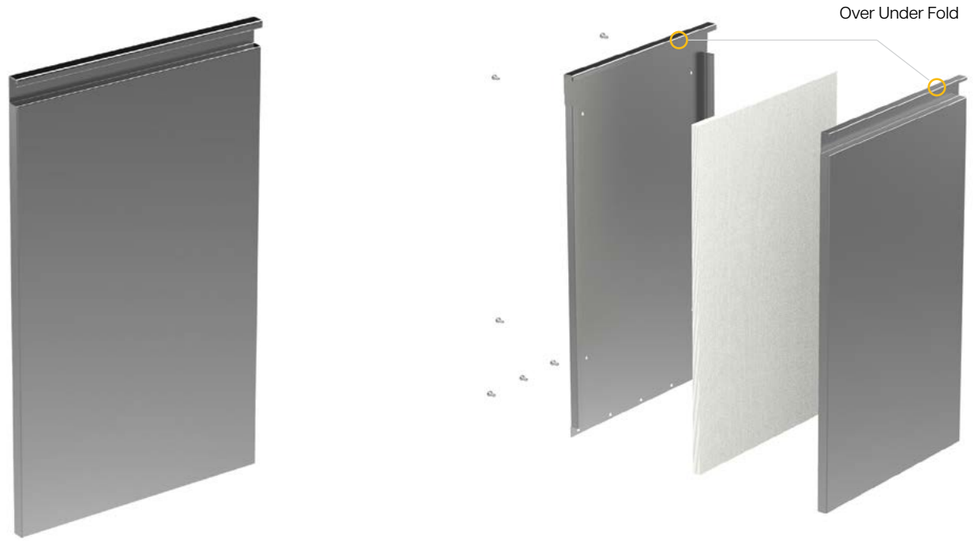

DOOR STYLE & PROFILE



Slab





Thin Shaker



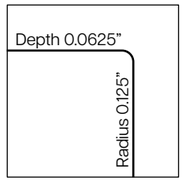





Shaker



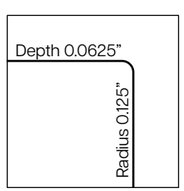





Integrated Handle







Vertical Integrated Handle (Door Only)





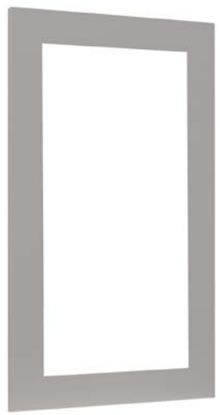

Made for Glass (Door Only)



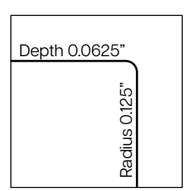

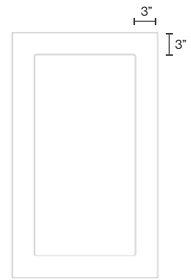

DOOR HANDLE OPTIONS

Mitered Round



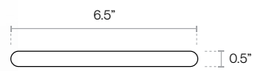



Mitered Square



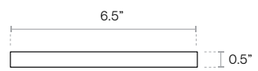

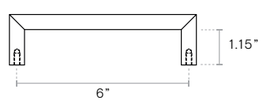

Capline



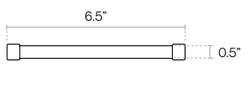

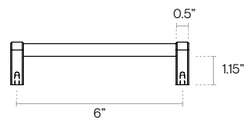

Overline



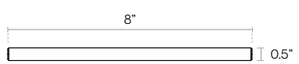

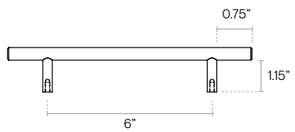

D-Line



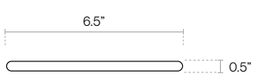

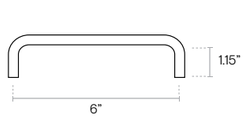

Handle Placement

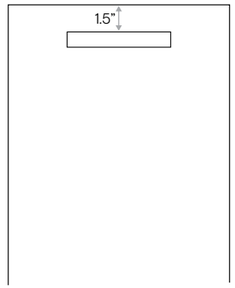

Base Pullout
(Centered)

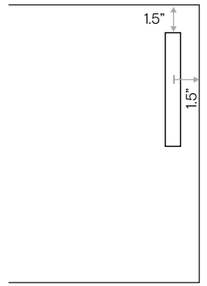

Base Door
(Top Corner)

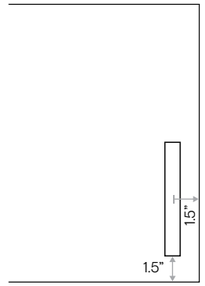

Wall Door
(Bottom Corner)

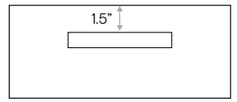

Base Drawer
(Centered)

Variable Length Option Handle Placement

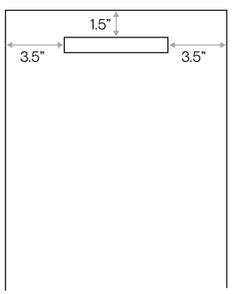

Base Pullout
(Centered)

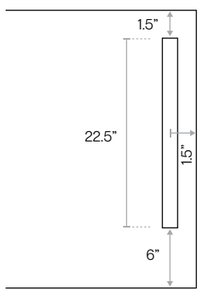

Base Door
(Top Corner)

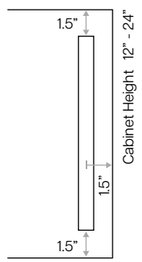

Wall Door
(Top Corner)

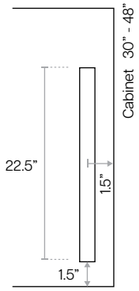

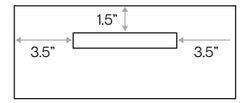

Base Drawer
(Centered)

SIDE ENDS & PANELS

Finished End Panel



1”	24”, 28”, 32”	30”
WIDTH	DEPTH	HEIGHT

Decorative Door End Panel



1”	24”, 28”, 32”	30”
WIDTH	DEPTH	HEIGHT

Choose from of any available door style.

Finished Back Panel



0.75”, 1”	< 48”	30”
THICKNESS	WIDTH	HEIGHT

Partial Depth Base Cabinet Side Skin



1/8”	5”	30”
WIDTH	DEPTH	HEIGHT

COUNTERTOP SUPPORT PANELS

Countertop Support Panel



2”, 3”,4”	24”, 28”, 32”	34.5” *
WIDTH	DEPTH	HEIGHT

Countertop Support Panel with Single Electrical Outlet Box

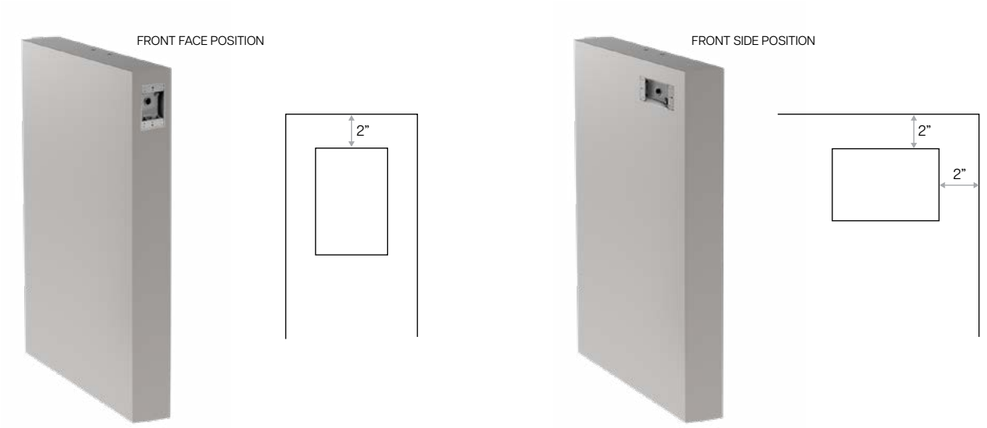

4”	24”, 28”, 32”	34.5” *
WIDTH	DEPTH	HEIGHT

* Adjustable feet provide support for heights ranging from 34.5” to 36.5”. However, the panel height remains fixed, resulting in a visible gap if the total height exceeds 34.5”.

BRIDGE KITS

Corner Countertop Support Filler Kit

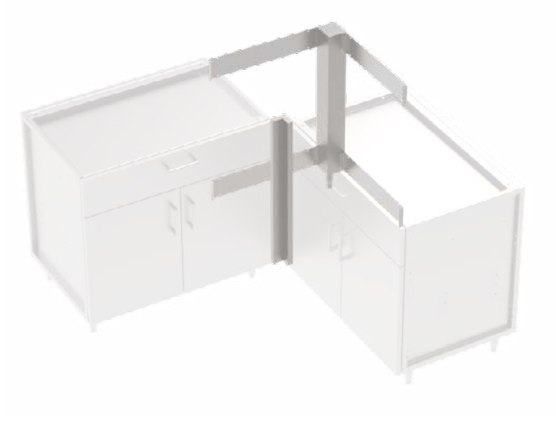

Available for all standard depth base cabinets.

Diagonal Corner Filler Kit



Available for all standard depth base cabinets.

Under Counter Appliance Bridge Kit



15”, 24”, 30”	24”, 28”, 32”	30”
OPENING WIDTH	DEPTH	HEIGHT

Add an additional 0.25" to the appliance manufacturer's cutout width specifications to ensure proper fitment.

TOE KICK

ACCESSIBLE HEIGHT SINK BASE CABINETS TOEKICK OPTION



An optional door-mounted toe kick panel is available to provide a finished appearance. The toe kick panel is fixed to the cabinet doors and moves with the doors during operation, maintaining knee and toe clearance when doors are open.

Toe kick panels are non-structural and intended for aesthetic coverage only.

FINISH OPTIONS

Stainless steel is naturally resistant to corrosion and can be used in its raw form without additional coatings. Whether left in its raw form for a sleek, modern look or powder coated for added durability and design flexibility, stainless steel is a perfect choice for both indoor and outdoor kitchens.

304 / 316L Stainless Steel - Brushed #4 Finish





304 / 316 Stainless Steel - Exterior Powder Coat





POWDER COAT COLOR AND FINISH OPTIONS

We offer 3 Types of textures for the powder coat finish.



Solid



Metallic



Fine Texture

Gloss Level Reference



Powder Coat Touch-Up Pen



One touch-up pen is included per four cabinets for minor cosmetic touch-ups during installation.

Pens are color-matched to the official Tiger Drylac color standard and filled with a fast-drying acrylic enamel designed for metal surfaces. Intended for small handling marks only and not a replacement for factory powder coating.

Core Neutrals:



Bianco 302
Glossy | 3810007 Gloss Level 80-95



Extrusion White
Glossy | 3810090 Gloss Level 80-95



Seashell White
Satin | 3810130 Gloss Level 23-33



Pompano White
Semi Matte | 3814401 Gloss Level 40-50



Bone White
Satin | 3810070 Gloss Level 16-35



Sky Grey
Satin | 3870048 Gloss Level 26-35



Slate Grey
Satin | 3870019 Gloss Level 20-30



Grey
Satin | 3870049 Gloss Level 25-35



Charcoal
Satin | 3870780 Gloss Level 25-35



Grey Classic 314
Glossy | 3870061 Gloss Level 80-95



Jet Black
Satin | 3880020 Gloss Level 26-35



Carbon 301
Glossy | 3880002 Gloss Level 80-95

Earthy Neutrals:



Almond
Satin | 3815003 Gloss Level 26-35



Sandstone
Satin | 3815012 Gloss Level 26-35



Taupe
Satin | 3870070 Gloss Level 26-35



Ash Grey
Satin | 3870025 Gloss Level 26-35



Sierra Tan
Satin | 3815002 Gloss Level 25-35



Carlsbad Canyon Brown
Semi-Gloss | 3816500 Gloss Level 55-65



Koko Brown
Satin | 3860018 Gloss Level 26-35



Marrone
Glossy | 3860026 Gloss Level 80-95



Brick Red
Matte | 3830028 Gloss Level 15-25



Redwood
Satin | 3830041 Gloss Level 26-35



Statuary Bronze
Satin | 3860080 Gloss Level 26-35



Dark Anodized Bronze
Satin | 3860090 Gloss Level 25-35

Metallic



Argento 307
Metallic | 3890009



Champagne 302
Metallic | 3815018



Champagne 304
Metallic | 3815021



Bengal Silver
Metallic | 14999999



Medium Bronze
Metallic | 3860060



Spartacus Bronze
Metallic | 3868008



Neptune Bronze
Metallic | 3896021



Argento 314
Metallic | 3890018

Metallic Pearl



Pearl Dark Grey
Metallic | 3890015



Pearl Copper
Metallic | 3860064



Pearl Night Blue
Metallic | 3840127

Greens



Covert Green
Semi-Gloss | 3850500 Gloss Level 55-65



Aged Copper
Matte | 3860006 Gloss Level 15-25



Ivy green
Satin | 3850080 Gloss Level 26-35



Classic Green
Satin | 3850037 Gloss Level 20-30



Hartford Green
Satin | 3850110 Gloss Level 26-35

Blues



Military Blue
Satin | 3840051 Gloss Level 20-30



Interstate Blue
Matte | 3840025 Gloss Level 15-25



Azzurro 307
Matte | 3840033 Gloss Level 80-90

Specialty - Metallic Sparkle



Brilliant Sparkle Silver
Metallic | 3890080



Argento 308
Metallic | 3890011

Specialty - Fine Texture



Gold Brown
Fine Texture | 3868192



Greco
Fine Texture | 3868130



Ambra
Fine Texture | 3860499



Steel Viola
Fine Texture | 3834005

BASE CABINETS



Full Height Single Door
BASE CABINET

Dimensions
H 34.5”
D 24”, 28”, 32”
W 9”, 12”, 15”, 18”, 21”, 24”



Full Height Double Doors
BASE CABINET

Dimensions
H 34.5”
D 24”, 28”, 32”
W 24”, 27”, 30”, 33”, 36”, 39”, 42”, 45”, 48”



Quarter Drawer with Single Door
BASE CABINET

Dimensions
H 34.5”
D 24”, 28”, 32”
W 9”, 12”, 15”, 18”, 21”, 24”



Quarter Drawer with Double Doors
BASE CABINET

Dimensions
H 34.5”
D 24”, 28”, 32”
W 24”, 27”, 30”, 33”, 36”



Two Quarter Drawers with Double Doors
BASE CABINET

Dimensions
H 34.5”
D 24”, 28”, 32”
W 24”, 30”, 36”, 42”, 48”



Third Drawer with Single Door
BASE CABINET

Dimensions
H 34.5”
D 24”, 28”, 32”
W 9”, 12”, 15”, 18”, 21”, 24”



Third Drawer with Double Doors
BASE CABINET

Dimensions
H 34.5”
D 24”, 28”, 32”
W 24”, 27”, 30”, 33”, 36”



Two Third Drawers with Double Doors
BASE CABINET

Dimensions
H 34.5”
D 24”, 28”, 32”
W 24”, 30”, 36”, 42”, 48”

SINK BASE CABINETS



Full Height Single Door
SINK BASE CABINET

Dimensions
H 34.5”
D 24”, 28”, 32”
W 15”, 18”, 21”, 24”



Full Height Double Doors
SINK BASE CABINET

Dimensions
H 34.5”
D 24”, 28”, 32”
W 24”, 27”, 30”, 33”, 36”, 42”, 45”, 48”



Quarter False Drawer with Single Door
SINK BASE CABINET

Dimensions
H 34.5”
D 24”, 28”, 32”
W 15”, 18”, 21”, 24”



Quarter False Drawer with Double Doors
SINK BASE CABINET

Dimensions
H 34.5”
D 24”, 28”, 32”
W 24”, 27”, 30”, 33”, 36”, 39”, 42”, 45”, 48”



Third False Drawer with Single Door
SINK BASE CABINET

Dimensions
H 34.5”
D 24”, 28”, 32”
W 15”, 18”, 21”, 24”



Third Drawer with Double Doors
SINK BASE CABINET

Dimensions
H 34.5”
D 24”, 28”, 32”
W 24”, 27”, 30”, 33”, 36”, 39”, 42”, 45”, 48”

ACCESSIBLE HEIGHT SINK BASE CABINETS



Open Front
SINK BASE CABINET

Dimensions
H 32.5”
D 24”, 28”, 32”
W 36”



Full Height Double Doors
SINK BASE CABINET

Dimensions
H 32.5”
D 24”, 28”, 32”
W 36”



Quarter False Drawer with Double Doors
SINK BASE CABINET

Dimensions
H 32.5”
D 24”, 28”, 32”
W 36”

ACCESSIBLE HEIGHT SINK BASE CABINETS TOEKICK OPTION



An optional door-mounted toe kick panel is available to provide a finished appearance. The toe kick panel is fixed to the cabinet doors and moves with the doors during operation, maintaining knee and toe clearance when doors are open.

Toe kick panels are non-structural and intended for aesthetic coverage only.

DRAWER BANK



Two Half Drawers
DRAWER BANK

Dimensions
H 34.5”
D 24”, 28”, 32”
W 12”, 15”, 18”, 21”, 24”, 27”, 30”, 33”, 36”



Three Third Drawers
DRAWER BANK

Dimensions
H 34.5”
D 24”, 28”, 32”
W 12”, 15”, 18”, 21”, 24”, 27”, 30”, 33”, 36”



One Quarter & Two 3/8 Drawer
DRAWER BANK

Dimensions
H 34.5”
D 24”, 28”, 32”
W 12”, 15”, 18”, 21”, 24”, 27”, 30”, 33”, 36”



Two Quarter & One Half Drawer
DRAWER BANK

Dimensions
H 34.5”
D 24”, 28”, 32”
W 12”, 15”, 18”, 21”, 24”, 27”, 30”, 33”, 36”



Four Quarter Drawer
DRAWER BANK

Dimensions
H 34.5”
D 24”, 28”, 32”
W 12”, 15”, 18”, 21”, 24”, 27”, 30”, 33”, 36”

PULL OUT CABINETS



Single Can Recycle Center
PULL OUT BASE CABINET

Dimensions
H 34.5”
D 24”, 28”, 32”
W 15”, 18”



Double Can Recycle Center
PULL OUT BASE CABINET

Dimensions
H 34.5”
D 28”, 32”
W 18”, 21”, 24”



Tray Divider
PULL OUT BASE CABINET

Dimensions
H 34.5”
D 24”, 28”, 32”
W 9”, 12”



Pantry
PULL OUT BASE CABINET

Dimensions
H 34.5”
D 24”, 28”, 32”
W 9”, 12”

CORNER BASE CABINETS



Diagonal Corner
CORNER BASE CABINET

Dimensions
H 34.5”
D 24”, 28”, 32”
W 36”, 39”, 42”, 45”, 48”, 51”



Blind Corner
CORNER BASE CABINET

Dimensions
H 34.5”
D 24”, 28”, 32”
W 36”, 39”, 42”, 45”, 48”, 51”

SPECIALTY DEPTH BASE CABINETS

13” Depth



Full Height Single Door
BASE CABINET

Dimensions
H 34.5”
D 13”
W 9”, 12”, 15”, 18”, 21”, 24”



Full Height Double Doors
BASE CABINET

Dimensions
H 34.5”
D 13”
W 24”, 27”, 30”, 33”, 36”, 39”, 42”, 48”

18” Depth



Full Height Single Door
BASE CABINET

Dimensions
H 34.5”
D 18”
W 9”, 12”, 15”, 18”, 21”, 24”



Full Height Double Doors
BASE CABINET

Dimensions
H 34.5”
D 18”
W 24”, 27”, 30”, 33”, 36”, 39”, 42”, 48”



Drawer with Single Door
BASE CABINET

Dimensions
H 34.5”
D 18”
W 12”, 15”, 18”, 21”, 24”

Available Drawer Configurations
- Quarter Drawer
- Third Drawer



Drawer with Double Doors
BASE CABINET

Dimensions
H 34.5”
D 18”
W 24”, 27”, 30”, 33”, 36”



Two Half Drawers
DRAWER BANK

Dimensions
H 34.5”
D 18”
W 12”, 15”, 18”, 21”, 24”, 27”, 30”, 33”, 36”



Three Third Drawers
DRAWER BANK

Dimensions
H 34.5”
D 18”
W 12”, 15”, 18”, 21”, 24”, 27”, 30”, 33”, 36”

Available Drawer Configurations
- Quarter Drawer
- Third Drawer

SECTION 900

INDEX

SKU Glossary

CABINET STYLE **WIDTH #”** - **QTY ATTRIBUTE(S) #** - **DEPTH #”** - **DOOR SWING**

2DB	2 Drawer Base Cabinet
3DB	3 Drawer Base Cabinet
4DB	4 Drawer Base Cabinet
APK	Appliance Prep Kit
B	Base Cabinet
BC	Blind Corner
BCB	Blind Corner Base Cabinet
BCEP	Base Column End Panel
BCW	Blind Corner Wall Cabinet
BCW	Blind Corner Wall Cabinet
BFCAK	Base Filler Angle Corner Adapter Kit
BFL	Base Filler
BPDTC	Base Pullout with Double Trash Can
BPPO	Base Pullout with Pantry Organizer
BPSTC	Base Pullout with Single Trash Can
BPTD	Base Pullout with Tray Divider
CBFL	Corner Base Filler
CSFLK	Corner Support Filler Kit
DCB	Diagonal Corner Base
DCW	Diagonal Corner Wall Cabinet
FHB	Full Height Base Cabinet
FHSB	Full Height Sink Base Cabinet
FHSB	Full Height Sink Base Cabinet
SB	Sink Base Cabinet
SFS	Seamless Floating Shelf
TEP	Tall End Panel
TFL	Tall Filler
TPA	Tall Pantry Cabinet
W	Wall Cabinet
WEP	Wall End Panel
WFL	Wall Filler

D	Door
FQDR	False Quarter Drawer
FTDR	False Third Drawer
HDR	Half Drawer
QDR	Quarter Drawer
TDR	Third Drawer
TEDR	Three Eights Drawer

L	Left Door Swing
R	Right Door Swing

Attribute Mapping Examples



B18-1D-1QTDR -24-L

Base Cabinet 18” Wide - 1 Door and 1 Quarter Height Drawer - 24” Depth - Left Swing

B18-1D-1TDR -24-L

When multiple attributes are used, they are also separated by a hyphen.



3DB18-24

Three Drawer Base 18” Wide - 24” Depth

* If no attributes are specified, particularly for drawer banks, the drawers are evenly distributed.



3DB18-2QDR-1HDR-24

Three Drawer Base 18” Wide - 2 Quarter Drawers and 1 Half Drawer - 24” Depth

* This 3-drawer bank includes a mix of drawer sizes, which are always defined using individual attributes.

** When there are no doors the “door swing“ segment after the depth is omitted.

METAL ALLOYS

304 Stainless Steel

ASTM Designation
304
S30400

EN Designation
1.4301
X5CrNi18-10



ASTM (American Society for Testing and Materials) assigns the 304 designation to this stainless steel grade. 304 stainless steel is widely used and known for its good corrosion resistance, strength, and ease of fabrication.

EN (European Norm) assigns the designation 1.4301 to this stainless steel. It is the European equivalent of ASTM 304 and provides identical or nearly identical properties.

Chemical/Standard Names:

S30400: This is the Unified Numbering System (UNS) designation for 304 stainless steel, used for consistent identification across standards and industries.

X5CrNi18-10: This is the European material designation under EN standards:

X: Stainless steel.
5: ~0.05% carbon content.
CrNi18-10: Approximately 18% chromium and 10% nickel content.

Elements and Their Roles

Cr (Chromium) 17.50–19.00%
Chromium is the key element that gives stainless steel its corrosion resistance by forming a passive chromium oxide layer on the surface. The range of 17.50–19.00% ensures strong resistance to oxidation and rust.

Ni (Nickel) 8.00–10.00%
Nickel enhances corrosion resistance, especially in acidic or chloride-containing environments. It also improves the alloy's toughness and ductility, making it more formable.

Mn (Manganese) ≤ 2.00%
Manganese improves tensile strength and hardness. It also contributes to the alloy's toughness and assists in deoxidation during the steel making process.

Si (Silicon) ≤ 0.75%
Silicon improves oxidation resistance and enhances the alloy's strength at high temperatures. It also aids in the deoxidation process during steel manufacturing.

C (Carbon) ≤ 0.070%
Carbon increases strength and hardness but can reduce corrosion resistance if present in higher amounts. A low carbon content helps prevent sensitization, which can lead to intergranular corrosion.

P (Phosphorus) ≤ 0.040%
Phosphorus improves machinability and strength, but excessive amounts can decrease ductility and increase brittleness. Its presence is carefully controlled.

S (Sulfur) ≤ 0.015%
Sulfur improves machinability but is kept low because higher amounts can reduce corrosion resistance and toughness, particularly in applications requiring high durability.

Corrosion Resistance

This data demonstrates that 304 Stainless Steel is a versatile and corrosion-resistant material, making it ideal for use in environments that require durability against chemical exposure or food-safe applications

304 Stainless Steel exhibits corrosion rates resistance lower than 0.004 in/year in the following media:

- 20% acetic acid at 176°
- 90% formic acid at 68°
- 20% phosphoric acid at 140°
- 20% nitric acid at 122°
- 90% sulphuric acid at 68°
- Toluene
- Milk
- Beer
- Juice
- Wine

Pitting Corrosion

304 Stainless Steel is successfully used in media where chloride concentration does not exceed 200 ppm. Chlorides (such as those in salt or seawater) are common causes of pitting corrosion in stainless steel. It is a critical factor when selecting materials for environments exposed to salty or chloride-containing conditions.

200 ppm is considered a moderate level of chlorides, which means:

The material is suitable for mildly corrosive environments.
It may not be ideal for highly salty environments, like marine applications or areas with de-icing salts.

Specifications

304 Stainless Steel is approved in compliance with: PED DGRL 97/23/EG according to EN 10028-7 and AD 2000 Merkblatt W2 and W10.

316L Stainless Steel

ASTM Designation
316L
S31603

EN Designation
1.4304
X5CrNi18-10



ASTM (American Society for Testing and Materials) assigns the 316L designation to this stainless low-carbon steel grade. Its ability to withstand high humidity, salt exposure, and temperature fluctuations makes it ideal for applications in marine environments, cold climates, and areas subject to harsh weathering.

EN (European Norm) assigns the designation 1.4304 is the EN numerical designation for 316L stainless steel. It aligns closely with ASTM 316L and describes the same alloy but according to European conventions.

Chemical/Standard Names:

S31603: This is the Unified Numbering System (UNS) designation for 316L stainless steel, used for consistent identification across standards and industries.

X2CrNiMo17-12-2: This is the European material designation under EN standards:

X: Stainless steel.
2: Refers to the low carbon content (~0.02%–0.03%, aligning with the "L").
CrNiMo: The primary alloying elements: chromium (Cr), nickel (Ni), and molybdenum (Mo).
17-12-2: Represents the approximate percentages of these elements:
17% chromium: Provides corrosion and oxidation resistance.
12% nickel: Improves toughness, ductility, and further enhances corrosion resistance.
2% molybdenum: Adds resistance to pitting and crevice corrosion, especially in chloride environments.

Elements and Their Roles

Cr (Chromium) 16.00–18.00%
Chromium is the key element in stainless steel that forms a passive chromium oxide layer, providing excellent corrosion and oxidation resistance.

Ni (Nickel) 10.00–14.00%
Nickel enhances corrosion resistance, especially in acidic environments, and improves the material's toughness, ductility, and overall strength.

Mo (Molybdenum) 2.00–3.00%
Molybdenum provides enhanced corrosion resistance, particularly in environments with chlorides or other harsh conditions. It is a distinguishing feature of grades like 316 stainless steel, making it more resistant to pitting and crevice corrosion than 304 stainless steel.

Mn (Manganese) ≤ 2.00%
Manganese contributes to the material's toughness and strength. It also enhances resistance to wear and assists in the steel's deoxidation during manufacturing.

Si (Silicon) ≤ 0.75%
Silicon improves oxidation resistance and enhances strength at high temperatures. It also aids in the steel production process by removing oxygen from molten steel.

P (Phosphorus) ≤ 0.045%
Phosphorus increases strength and machinability but is kept low because excess phosphorus can reduce ductility and increase brittleness.

C (Carbon) ≤ 0.030%
Low carbon content helps prevent sensitization (a type of corrosion that occurs at weld joints). This improves the material's resistance to intergranular corrosion.

S (Sulfur) ≤ 0.015%
Sulfur improves machinability but is carefully controlled because higher levels can reduce toughness and corrosion resistance.

Corrosion Resistance

This data highlights that 316L stainless steel is a highly versatile and corrosion-resistant material, making it perfect for outdoor environments requiring durability against harsh weather, chemical exposure, or food-safe applications.

316L Stainless Steel exhibits corrosion rates lower than 0.10 mm/year when in contact with the following media:

- 20% phosphoric acid at boiling temperature
- 20% sulphuric acid at room temperature
- 60% tartaric acid at 175°F
- 50% acetic acid at boiling temperatures
- 100% formic acid at 140°F
- Beer
- Milk
- 100% oleic acid at 350°F
- Petrol

Pitting Corrosion

316L Stainless Steel can be used in contact with solutions up to 1000 ppm of chloride ions.

Chlorides (such as those in salt or seawater) are common causes of pitting corrosion in stainless steel. It is a critical factor when selecting materials for environments exposed to salty or chloride-containing conditions.

This enhanced resistance makes 316L ideal for moderately to highly corrosive conditions, such as marine environments or areas exposed to saltwater and de-icing salts, where 304 may not perform as effectively.

High Temperature Oxidation Resistance

The maximum service temperature in continuous application is 1675°F. For intermittent thermal cycles, the maximum service temperature is 1600°F

Specifications

316L Stainless Steel is approved in compliance with: PED (Pressure Equipment Directive) according to EN 10028-7 and AD 2000 Merkblatt W2 and W10

Material Strength and Design

Our cabinets are engineered to provide the strength required to support sinks, countertops, bar tops, and countertop appliances. To ensure durability, we utilize heavy-duty stainless steel framing in our designs, capable of supporting hundreds of pounds per square foot. This is achieved through the use of heavier gauge stainless steel, integrated architectural framing, and a single-piece solid top that prevents deformation under pressure. Weak points are minimized by including only the necessary holes for assembly and installation, enhancing overall structural integrity.

When selecting a metal alloy for your project, the following construction methods are used:

304 & 316L Stainless Steel;

- Cabinet sections: 18-gauge (0.048" thick)
- Base support rails: 14-gauge (0.075" thick)
- Hinge panel: 16-gauge (0.060" thick)

Components (applicable to all alloy selections)

- Fasteners: 304 Stainless Steel
- Handles: 316L Stainless Steel

These specifications ensure your cabinets maintain exceptional strength, longevity, and performance, regardless of the chosen alloy.

POWDER COAT TESTING & COMPLIANCE

AASTM B117 - Excellent Weather Resistance
5% salt spray solution | 3,000 hours

- This test measures the coating's resistance to corrosion in a salt-laden environment.
- A 5% salt spray solution is sprayed continuously onto the coated surface for 3,000 hours (125 days).
- Implication: The powder coating provides excellent weather resistance, making it ideal for outdoor use in harsh conditions, such as coastal areas with high salt content in the air.

AASTM B117 - Excellent Exterior Properties
Determination of resistance to humidity | 3,000 hours

- This evaluates the coating's ability to withstand prolonged exposure to high humidity without degradation (e.g., blistering or peeling).
- Implication: The coating is highly durable in humid environments, which is important for both indoor kitchens (where humidity can arise from cooking) and outdoor kitchens exposed to rain or dew.

AAMA 2604 Compliant
Weather testing conducted in Miami Florida exposure at 45° angle, facing south, for 5 years

- AAMA 2604 is a high-performance standard for powder coatings, ensuring they maintain color, gloss, and structural integrity under outdoor conditions.
- The test involves 5 years of real-world weather exposure in Miami, FL, at a 45° angle facing south (maximizing sun exposure).
- Implication: The coating resists fading, chalking, and other weather-induced damage, making it suitable for long-term outdoor applications in sunny and challenging climates.

*A reasonable degree of gloss loss and color variation due to long term UV exposure should be expected. Gloss levels of 80-95+ are subject to a >30% retention over the course of 5 years. The remaining gloss values that can be expected may vary depending on color.

JW | METAL CABINETS

www.jwmetalcabinets.com



MADE IN NORTH CAROLINA, USA

(877) 484-2534 | 505 Cuthbertson St. Monroe, NC 28110